KONICA MINOLTA

SPECTROPHOTOMETER CM-2500d

High performance, low cost portable spectrophotometer.

The essentials of imaging

Designed for versatility in various applications, the CM-2500d is a portable integrating sphere spectrophotometer incorporating Numerical Gloss Control.

Simultaneous measurement of SCI (specular component included) and SCE (specular component excluded). Advanced Numerical Gloss Control.

Simultaneous measurement of SCI and SCE displays the data on the LCD in only 1.5 seconds. Unlike conventional spectrophotometers, there is no need to mechanically switch between SCI and SCE mode. This improves working efficiency and provides stable measured data since the measurement area does not shift when the mode is switched. And also Relativity Gloss Value can be displayed by using Numerical Gloss Control.

For plastics, paints, resins and consumer products

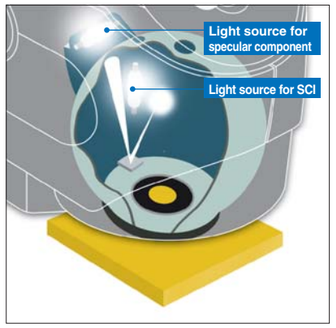

Relativity Gloss Value

The LCD specifications are subject to change without prior notice.

- SCI is a method in which measurements are taken with the specular reflection included. For this reason, it minimizes influences of the surface condition of a sample, and is especially suitable for color quality control and Computer Color Matching.
- SCE is a method in which measurements are taken excluding the specular reflection. This type of measurement provides results similar to those observed visually.

High reliability and long life. Maintenance-free design.

The number of moving parts in the instrument is minimized through the introduction of numerical control technology. The CM-2500d can be used with confidence, since it has been developed, manufactured and calibrated to meet ISO 9001 requirements.

Allows measurement in any position. Compact, lightweight, with an easy-to-operate navigation wheel and large LCD display.

The battery-powered small, light body allows the instrument to be placed in any position at the sample surface.
The CM-2500d's large LCD display and its reverse display function provide easy reading, irrespective of which hand it is held in. Using your finger, the navigation wheel allows simple, user friendly operation.
(Turn) (Push)

For paints, plastics, automobiles, ceramics, architectural interiors, textile, paper, food etc.

Promotes accurate, consistent color communication. Conforms to widely-accepted industry standards and allows measurements in all popular color spaces.

The optics use an integrating sphere to provide diffuse illumination/8-degree viewing system.
The CM-2500d conforms to all widely accepted standards including ISO, JIS, DIN, CIE and ASTM, and generates measurements in color spaces such as L*a*b*, Yxy, Munsell and CMC.

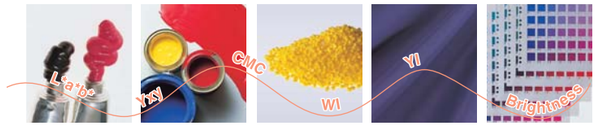

In various applications

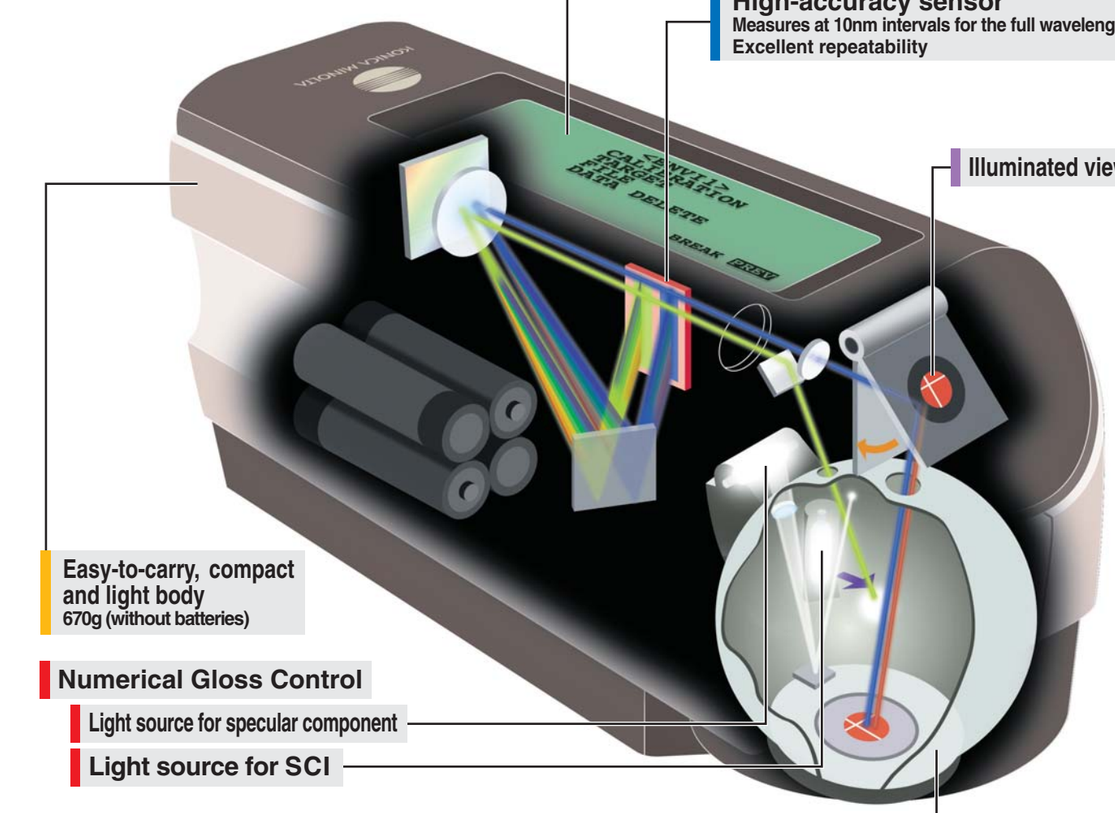

Measures the target with high accuracy. Easy-to-carry stylish body with an illuminated viewfinder.

The user can choose the most suitable measurement area for the target. The easy-to-carry body with the illuminated viewfinder enables the user to position the instrument on the target quickly and accurately.

For pharmaceuticals, cosmetics, printing, building materials, textiles, food etc.

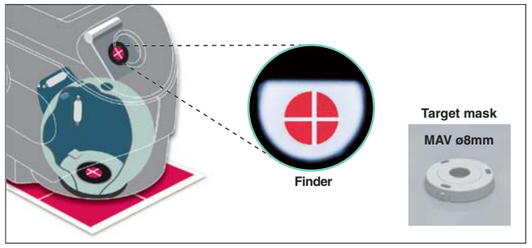

Powerful partnership between CM-2500d and SpectraMagic

Color Quality Control Software

SpectraMagic (Optional)

Supports Windows®98/2000,Windows NT®4.0

Consistent color communication. Since automatic setting of color difference tolerances is possible, accurate Pass/Fail information can be given to customers and manufacturers.
Enables color analysis from various viewpoints. Detailed, easy-to-see spectral graph.
Exports data to spreadsheet applications.

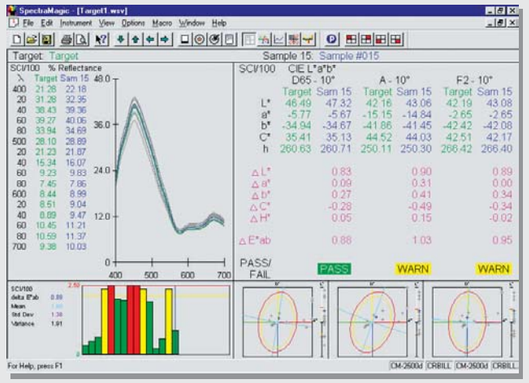

Procedures are displayed in the form of messages to eliminate in-process errors. Task function by CM-2500d and SpectraMagic.

Measurement procedure can be downloaded to the CM-2500d from **SpectraMagic**.
Since standard color difference for each part can be entered, human setting errors can be prevented.

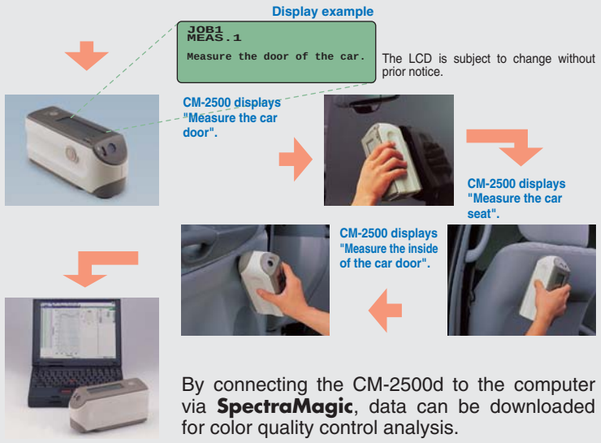

By connecting the CM-2500d to the computer via **SpectraMagic**, data can be downloaded for color quality control analysis.

<Main Specifications>

Color space / Color difference scales	L*a*b*, L*c*h, L*u*v*, Hunter Lab, FMC-2, CMC, CIE-94, XYZ, Yxy
Color indices	Metamerism, Whiteness/Whiteness Difference, Yellowness/Yellowness Difference, Tint/Tint Difference, Brightness, opacity, Haze, Dominant Wavelength, Excitation Purity, Ganz WI, Ganz Tint
Observer Conditions	2°, 10°
Illuminant Conditions	A, C, D65, D50, D55, D75, F2, F6, F7, F8, F10, F11, F12, U50
Displays	Spectral plot, Color plot, Tolerance plot, Statistical report, Real color, K/S, Multi-view display
Tolerance Settings	Elliptical, Box, Pass / Warn / Fail

Specifications

Illumination/ viewing system	d/8 (diffuse illumination, 8-degree viewing), equipped with simultaneous measurement of SCI (specular component included)/SCE(specular component excluded) Conforms to CIE No.15,ISO 7724/1,ASTM E1164, DIN 5033 Teil7 and JIS Z8722 Condition C standard.
Sphere Size	ø52mm
Light-receiving element	Silicon photodiode array (dual 40 elements)
Spectral separation device	Diffraction grating
Wavelength range	360nm to 740nm
Wavelength pitch	10nm
Half bandwidth	Approx. 10nm
Reflectance range	0 to 175%, resolution: 0.01%
Light source	2 pulsed xenon lamps
Measurement time	Approx. 1.5 seconds (approx. 2 seconds for fluorescent measurement)
Minimum interval between measurements	3 seconds for SCI/SCE (4 seconds for fluorescent measurement)
Battery perfomance	Alkaline manganese:approx. 1000 measurements
Measurement/ illumination area	MAV: ø8mm/ø11mm
Repeatability	Spectral Reflectance:Standard deviation within 0.1% (360 to 380nm within 0.2%) Colorimetric Value : Standard deviation within ΔE*ab 0.04(Measurement conditions:White calibration plate measured 30 times at 10-second intervals after white calibration was performed)
Inter instrument agreement	within ΔE*ab 0.2 (MAV/SCI) based on 12BCRA Series II color tiles compared to values measured with master body.
Measurement mode	Single measurement/automatic averaging of multiple measurements (auto mode: 3, 5, 8 times/manual mode)
Interface	RS-232C standard
Observer	2/10 degrees (CIE 1931/2°,CIE 1964/10°)
Illuminant	A, C, D50, D65, F2, F6, F7, F8, F10, F11, F12 (simultaneous evaluation is possible using two light sources)
Display data	Spectral value/graph, colorimetric value, color difference value/graph, PASS/FAIL result
Color space/ colorimetric data	L*a*b*, L*C*h, CMC (1:1), CMC (2:1), CIE94, Hunter Lab, Yxy, Munsell, XYZ, MI, WI (ASTM E313/CIE), WI/Tint (CIE/Ganz & Griesser), YI (ASTM E313/ASTM D1925), ISO Brightness (ISO 2470), Density status A/T, L_{99} a_{99} b_{99}, L_{99} C_{99} h_{99}
Data memory	700 (SCI/SCE as a set)
Tolerance Display	Tolerance for color difference (both box and eliptical tolerances can be set)
Power source	4 AA-size battery or AC adapter
Size (WxHxD)	69 x 96 x 193mm
Weight	Approx. 670g (without batteries)
Operating temperature/ humidity range	5 to 40˚C, relative humidity 80% or less with no condensation
Storage temperature/ humidity range	0 to 45˚C, relative humidity 80% or less with no condensation
Standard accessories	White calibration plate, Target mask ø8mm, RS-232C cable, AC adapter, AA-size battery (x4)
Optional Accessories	Hard case, Dust cover set, Dust cover, SpectraMagic(software), Zero calibration box

System Diagram

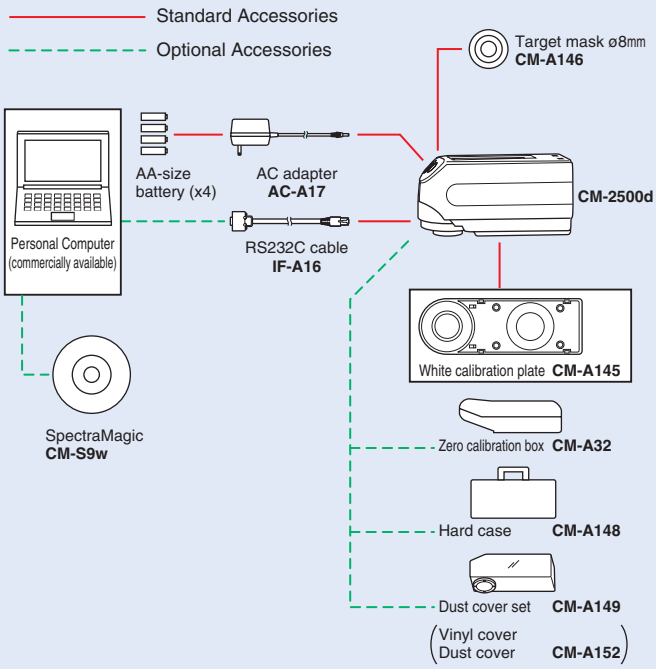

Dimensions (Units:mm) CM-2500d

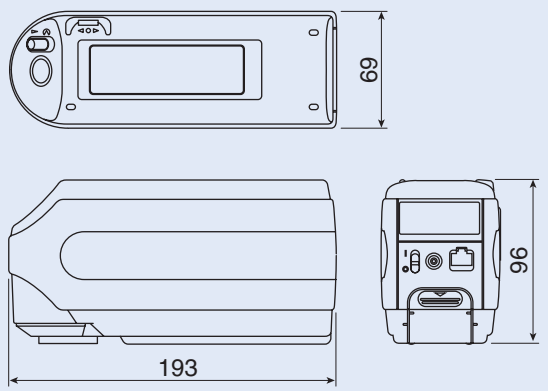

* The specifications and drawings given here are subject to change without prior notice.

Color control network by spectrophotometer

High inter-instrument agreement between the portable CM-2500d spectrophotometer and the desktop CM-3000 series make it easy to build a total color control network.

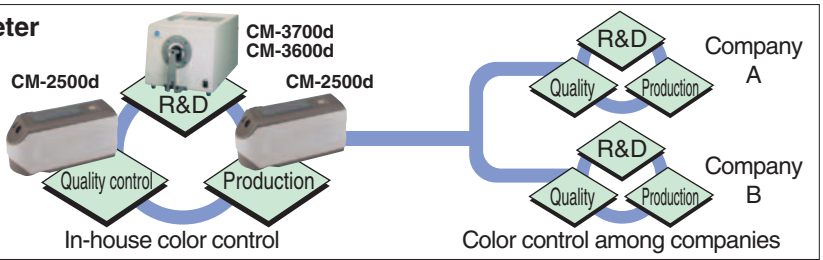

SAFETY PRECAUTIONS

To ensure correct use of the instrument, please adhere to the following.

- Before using the instrument, be sure to read the instruction manual.
- Always use the specified power. Use of inappropriate power may result in afire or electric shock.

ISO 9001 CERTIFIED

The manufacturing center of Konica Minolta Sensing Inc. (Location: Aichi Pref., Japan) was approved by the British certification organization Lloyd's Register Quality Assurance for certification under the ISO 9001: 1994 international quality management system standards on March 3, 1995. Since its establishment in 1990, the center has carried out the development and production of precision instruments and associated application software for the measurement of color, light, and shape.
Certification was awarded to the center's quality management system, including design, manufacturer, management of manufacture, calibration and servicing.Certification was carried over to the ISO 9001: 2000 standards in February, 2003.

KONICA MINOLTA SENSING, INC. **3-91, Daisennishimachi, Sakai.Osaka 590-8551, Japan**
Minolta Corporation / ISD 101 Williams Drive, Ramsey, New Jersey 07446, U.S.A. Phone: 1-888-ISD-COLOR (in USA), 201-529-6060 (outside) FAX: 201-529-6070

Aparelhos de Laboratório Mathis Ltda.

Estrada dos Estudantes, 261 - 06707-050 Cotia - SP - Brasil
Tel: 55 11 4612-2333 - Fax: 55 11 4612-2598
e-mail: brasil@mathisag.com
site: www.mathis.com.br

9242-4879-41 ADKBPK⑤ Printed in Japan